MOTOR KORUMALI MANUEL MONOFAZE JENERATÖR ŞEMASI

DIAGRAM FOR ELECTRIC GENERATING SET WITH ENGINE PROTECTION SYSTEM SINGLE PHASE

Motosan
Motor Sanayi ve Ticaret A.Ş.

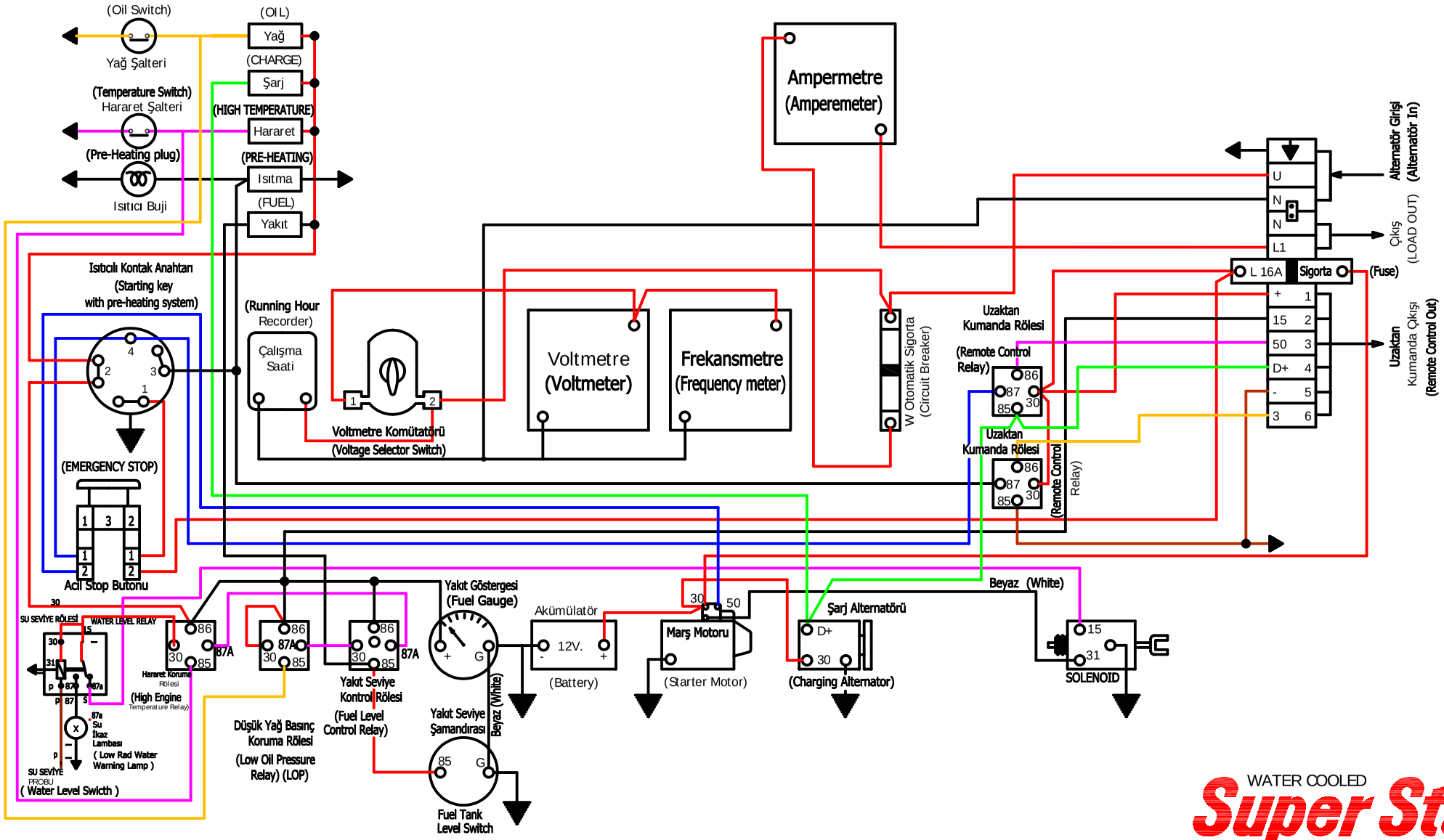

WATER COOLED
Super Star
DIESEL GENERATOR